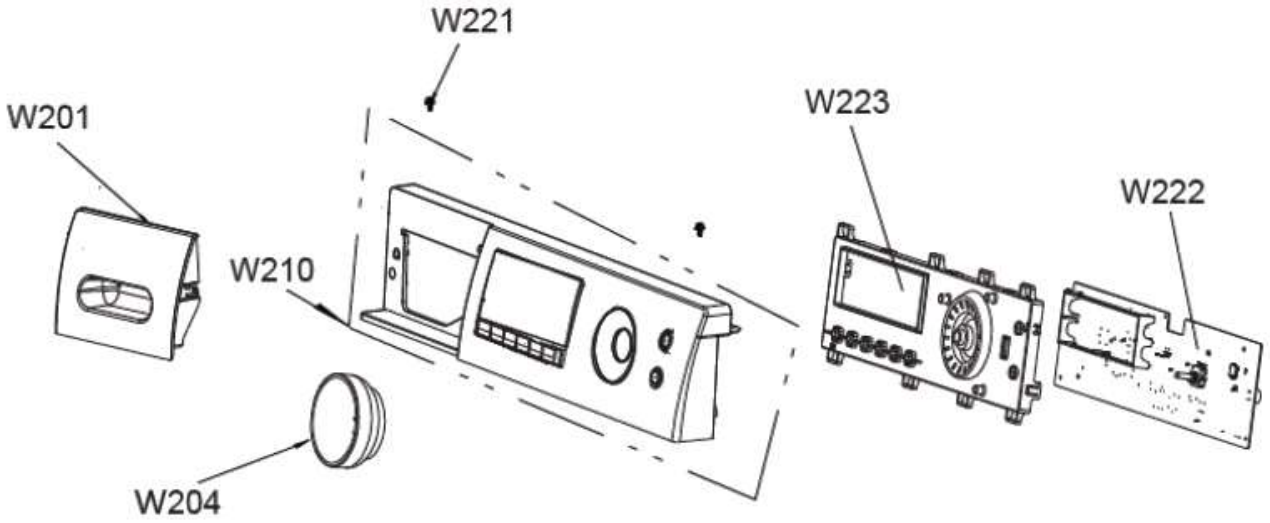
W221
W201
W223
W222
W210
W204

W281
W282

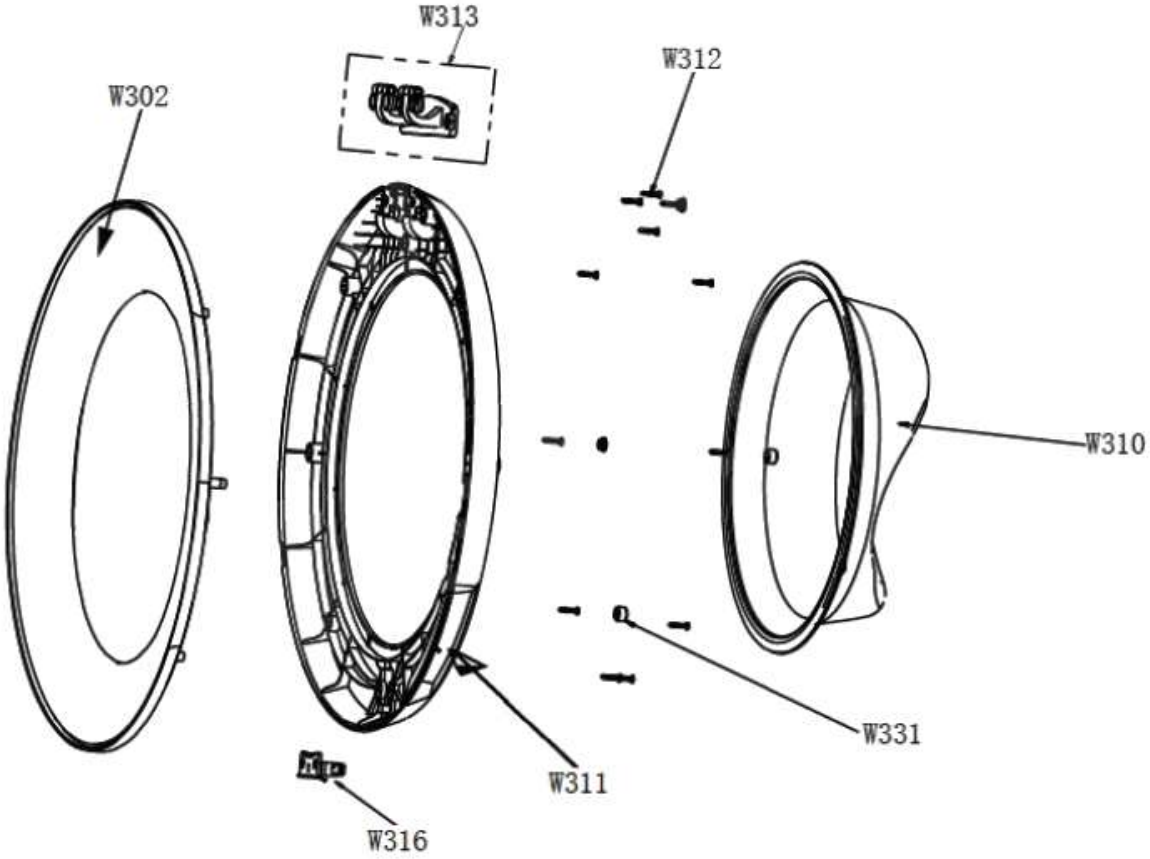
W313
W312
W302
W310
W331
W311
W316

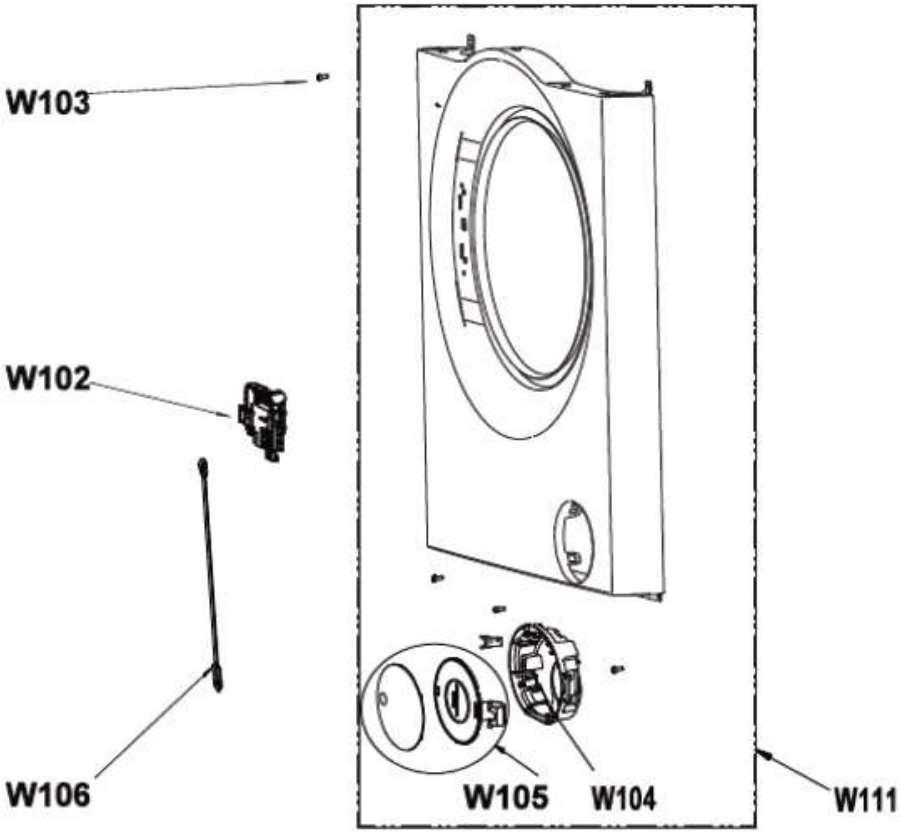
W103
W102
W106
W105
W104
W111

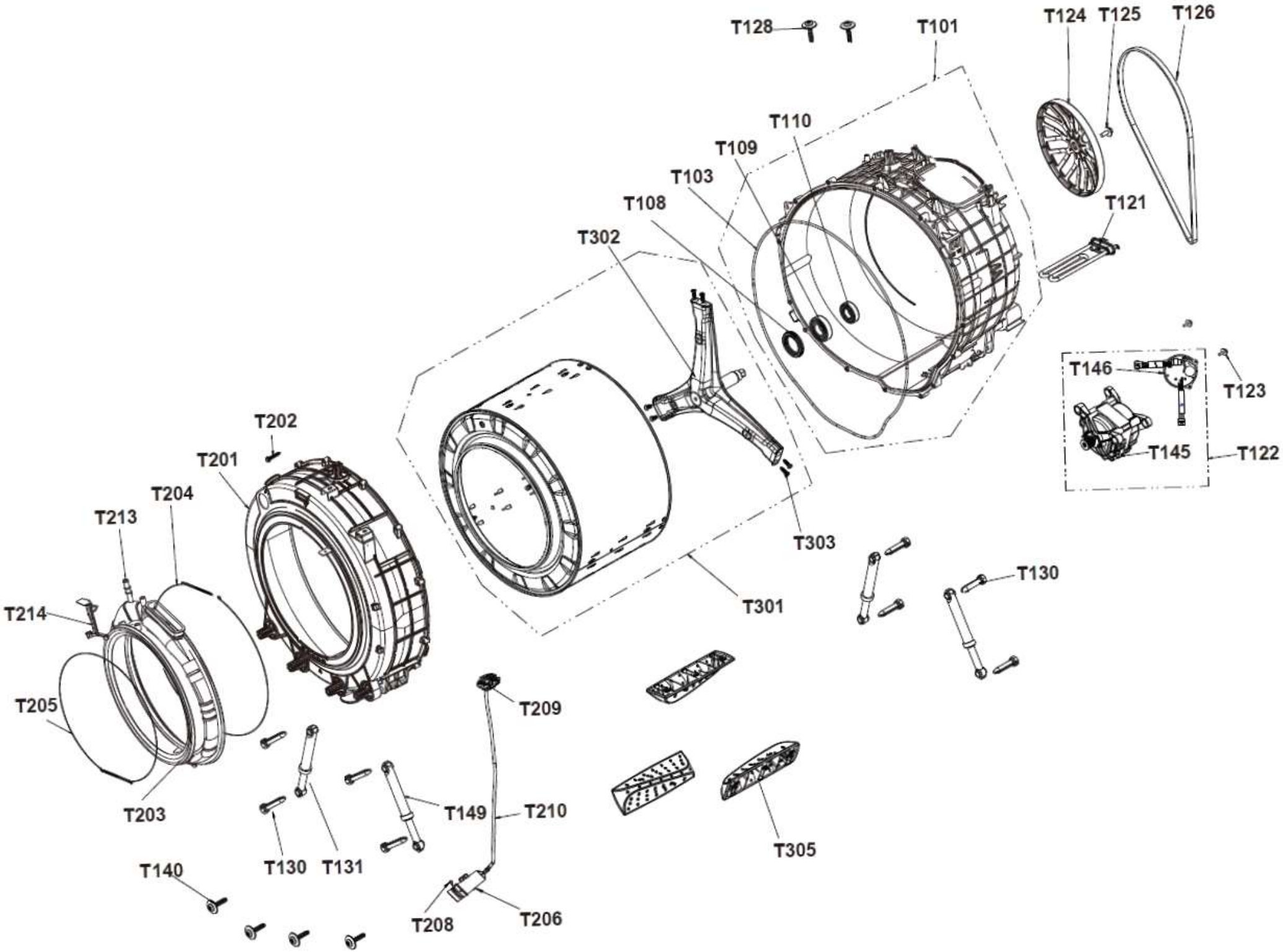
T128
T101
T124
T125
T126
T110
T109
T103
T108
T121
T302
T146
T123
T145
T122
T202
T201
T204
T213
T303
T130
T301
T214
T205
T209
T203
T149
T210
T305
T130
T131
T140
T208
T206

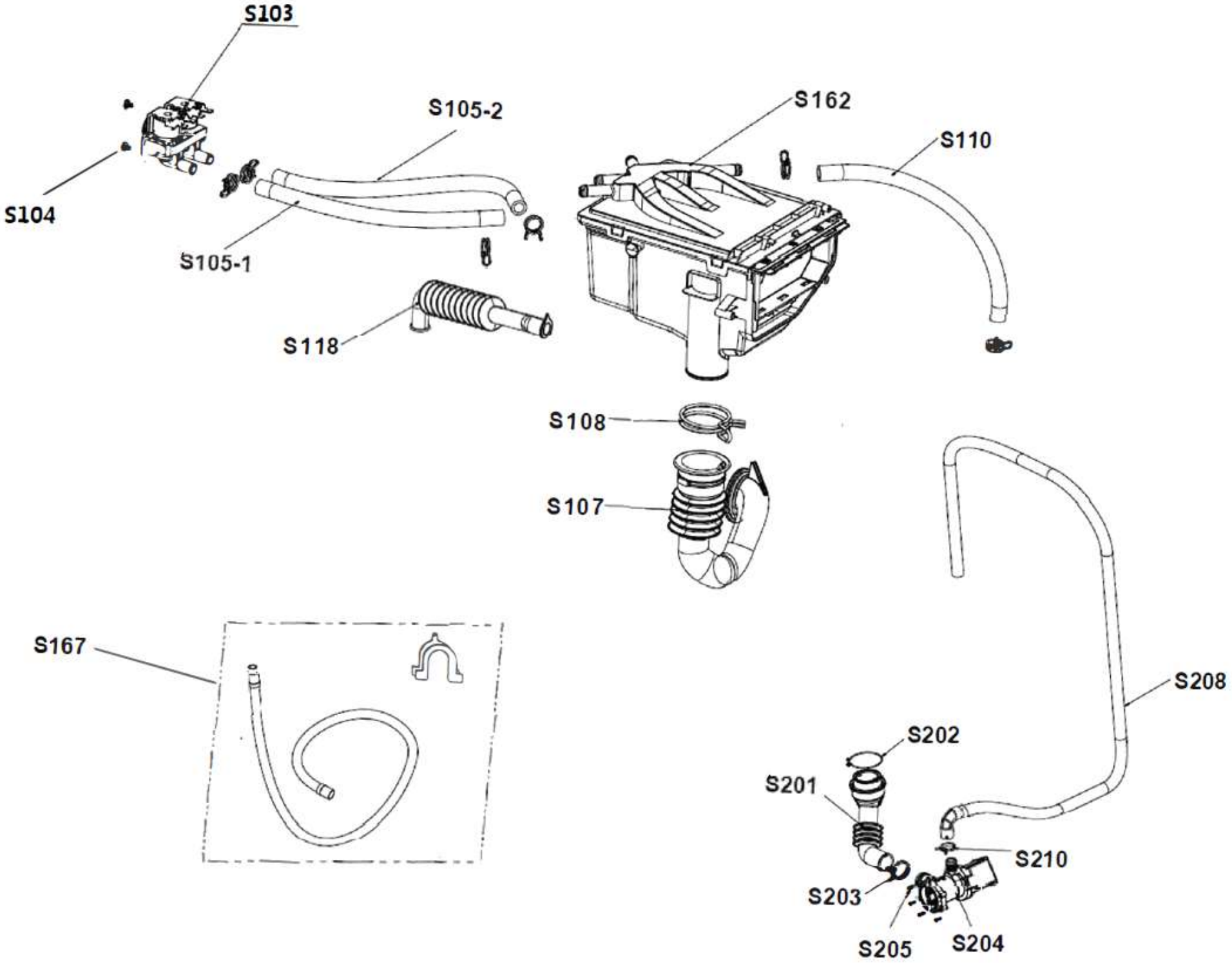
S103
S104
S105-2
S105-1
S118
S162
S110
S108
S107
S167
S208
S202
S201
S210
S203
S205
S204

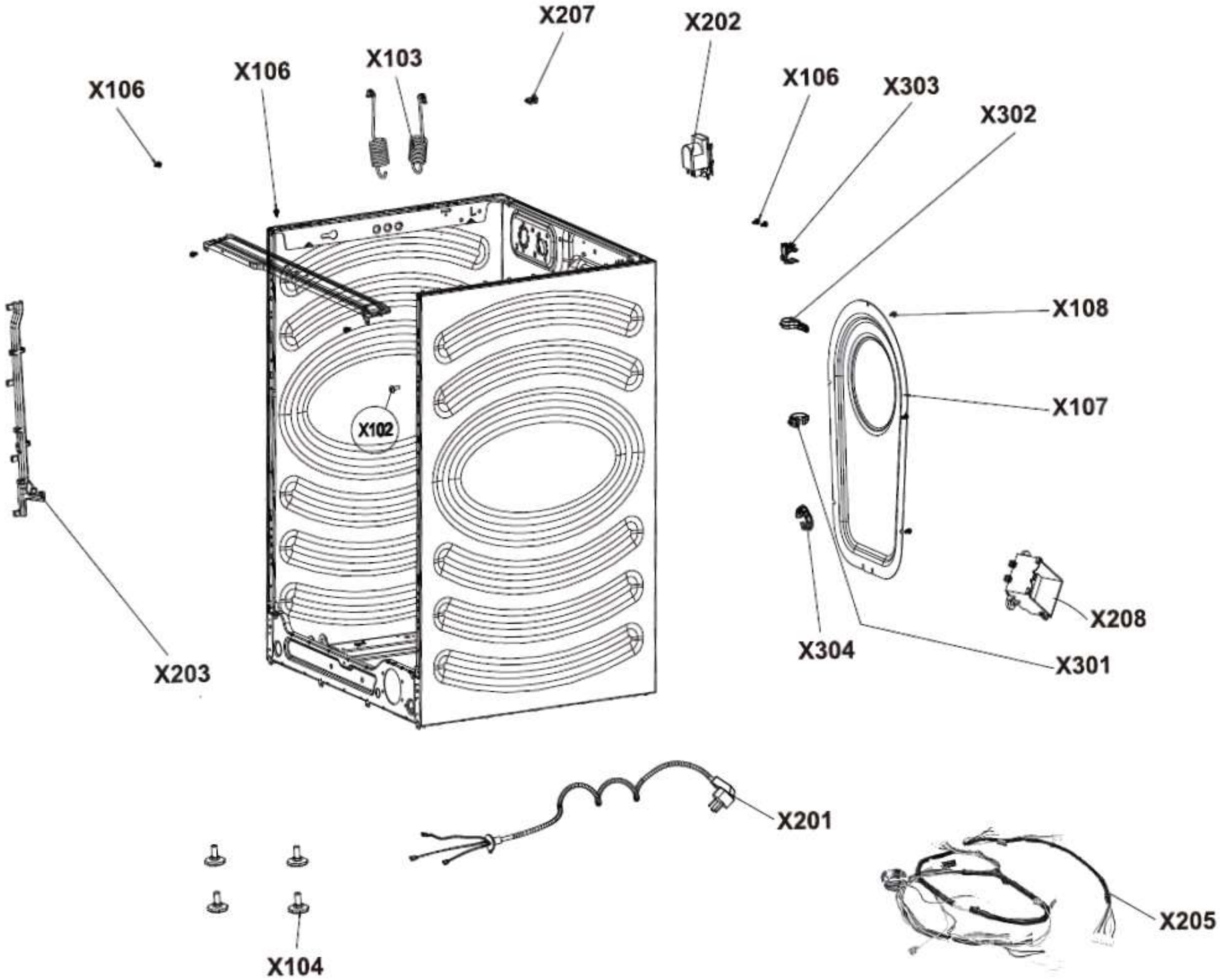
X207
X202
X106
X103
X106
X106
X303
X302
X108
X107
X102
X208
X304
X301
X203
X201
X205
X104